FLOS

D301F01C3EAF2 Steel

SuperWire F

Designed by Formafantasma, 2024

56W - 4134lm - 2700K - CRI> 90

Floor lamp emitting diffused light. Structure of planar glass panels joined by polished aluminium elements, forming hexagonal modules stacked on a steel tripod base. Equipped with a custom-made light source that emits warm, uniform light along its entire length and can be easily removed for replacement or repair.

Formafantasma's SuperWire is born from the designers' experimentation with LED technology, resulting in a modular collection that merges an industrial attitude with timeless design codes. Stemming from a complex creative process, it reflects the studio's blend of poetic aesthetics with environmental commitment and is a rare example of a lighting design with a removable, replaceable LED light source. The floor version is a tribute to the historic Luminator by the Castiglioni brothers.

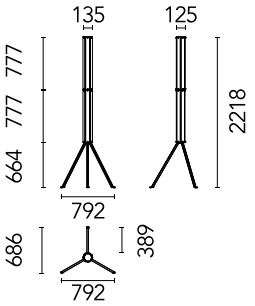

Are you a professional and your project needs consulting and support?

BOOK AN APPOINTMENT

Download

Mounting instructions PDF

Photometric Files

ULD ULD

LDT / IES ZIP

Technical Drawings

2D ZIP

3D ZIP

Main specifications

EAN	8059607068304
Mounting	Floor
Environments	Indoor dry location
Light source type	LED
Light sources included	Yes
LED type	Filament LED
Power (W)	56
System power (W)	56
Lumen Output (lm)	4134

Physical

Colour	Steel
Length (mm)	792
Cord colour	Clear
Cord length (mm)	3000
Net weight (kg)	12.3
Package volume (m3)	0.14
IP internal	20

©2026 Flos - P.IVA 00290820174 - 10/17/2026

In our constantly evolving world and business, technical upgrades happen every day. This means all product specifications and data are subject to change without warning in order t improve reliability, function, performance or otherwise. We make every effort to ensure the accuracy of our product images, however due to different lighting and screens used for viewing, the colours may vary. Images are indicative of the quality and style of the product but may not represent the precise details of the product you receive. This is because we are constantly working to make improvements. For aesthetic reasons, cables and/or electrical elements are often not shown. Refer to technical data sheets for all technical data. Images and colours are not part of any contract or warranty in any way.

IP 20

Ecodesign and Energy Labelling

This product contains a light source of energy efficiency class E

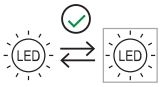

Replaceable (LED only) light source by an end-user

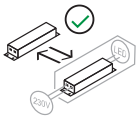

Replaceable control gear by an end-user

Schematic light drawing

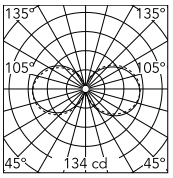

Luminous flux luminaire 2067 lm

Beam Angle:

h(m)	E(lx)	D(m)
1	0	
2	0	
3	0	
4	0	
5	0	

Photometric

Lighting type	Total
Light distribution	Asymmetric
CCT (K)	2700
CRI>	90
Extreme cut off	No

Electrical

Insulation class	III
Frequency (Hz)	50/60
Main voltage (Vac)	100-240
Power supply	Remote included
Dimmable	Yes
Power supply type	Dimmable
Dimming interface	Dimmer Integrated
Plug type	Type A, Type C, Type G
Batteries inside	No

©2026 Flos - P.IVA 00290820174 - 10/17/2026

In our constantly evolving world and business, technical upgrades happen every day. This means all product specifications and data are subject to change without warning in order t improve reliability, function, performance or otherwise. We make every effort to ensure the accuracy of our product images, however due to different lighting and screens used for viewing, the colours may vary. Images are indicative of the quality and style of the product but may not represent the precise details of the product you receive. This is because we are constantly working to make improvements. For aesthetic reasons, cables and/or electrical elements are often not shown. Refer to technical data sheets for all technical data. Images and colours are not part of any contract or warranty in any way.

Spare Parts

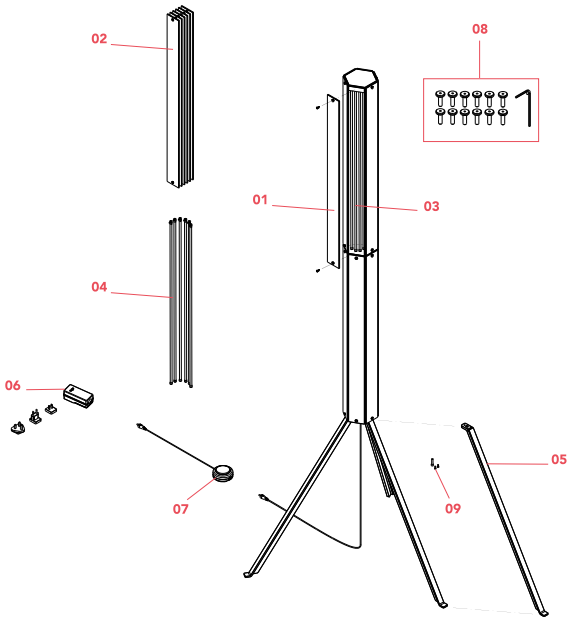

01.	Superwire Floor/Suspension Long glass plate and bushings	RF301F200
02.	Superwire Floor/Suspension Long glass plate and bushings kit 6 pcs	RF301F300
03.	Superwire Floor/Suspension Led L750 40MA/42VDC/27K filament	RF301F400
04.	Superwire Floor/Suspension Led L750 40MA/42VDC/27K filament kit 6 pcs	RF301F500
05.	Superwire Floor Brill leg assembly	RF301F164
06.	Black plug assembly kit & 48V driver	RF6600130
07.	Superwire Floor Switch dimmer assembly 48V	RF37195
08.	Superwire Kit with special screws	RF301T100
09.	Superwire F - Leg fixing screw kit	RF301F600

©2026 Flos - P.IVA 00290820174 - 10/17/2026

In our constantly evolving world and business, technical upgrades happen every day. This means all product specifications and data are subject to change without warning in order t improve reliability, function, performance or otherwise. We make every effort to ensure the accuracy of our product images, however due to different lighting and screens used for viewing, the colours may vary. Images are indicative of the quality and style of the product but may not represent the precise details of the product you receive. This is because we are constantly working to make improvements. For aesthetic reasons, cables and/or electrical elements are often not shown. Refer to technical data sheets for all technical data. Images and colours are not part of any contract or warranty in any way.

RF301F200

Superwire Floor/Suspension Long glass plate and bushings

RF301F300

Superwire Floor/Suspension Long glass plate and bushings kit 6 pcs

RF301F400

Superwire Floor/Suspension Led L750 40MA/42VDC/27K filament

RF301F500

Superwire Floor/Suspension Led L750 40MA/42VDC/27K filament kit 6 pcs

RF301F164

Superwire Floor Brill leg assembly

RF6600130

Black plug assembly kit & 48V driver

RF37195

Superwire Floor Switch dimmer assembly 48V

RF301T100

Superwire Kit with special screws

©2026 Flos - P.IVA 00290820174 - 10/17/2026

In our constantly evolving world and business, technical upgrades happen every day. This means all product specifications and data are subject to change without warning in order t improve reliability, function, performance or otherwise. We make every effort to ensure the accuracy of our product images, however due to different lighting and screens used for viewing, the colours may vary. Images are indicative of the quality and style of the product but may not represent the precise details of the product you receive. This is because we are constantly working to make improvements. For aesthetic reasons, cables and/or electrical elements are often not shown. Refer to technical data sheets for all technical data. Images and colours are not part of any contract or warranty in any way.

RF301F600

Superwire F - Leg fixing screw kit

©2026 Flos - P.IVA 00290820174 - 10/17/2026

In our constantly evolving world and business, technical upgrades happen every day. This means all product specifications and data are subject to change without warning in order t improve reliability, function, performance or otherwise. We make every effort to ensure the accuracy of our product images, however due to different lighting and screens used for viewing, the colours may vary. Images are indicative of the quality and style of the product but may not represent the precise details of the product you receive. This is because we are constantly working to make improvements. For aesthetic reasons, cables and/or electrical elements are often not shown. Refer to technical data sheets for all technical data. Images and colours are not part of any contract or warranty in any way.