FLOS

D301S31C3EAF2 Steel

SuperWire S3

Designed by Formafantasma, 2025

90W - 6450lm - 2700K - CRI> 90

Suspension lamp emitting diffused light. Structure of planar glass panels joined by polished aluminium elements, forming hexagonal modules connected by a polished aluminum element. Equipped with a custom-made light source that emits warm, uniform light along its entire length and can be easily removed for replacement or repair.

Formafantasma's SuperWire is born from the designers' experimentation with LED technology, resulting in a modular collection that merges an industrial attitude with timeless design codes. Stemming from a complex creative process, it reflects the studio's blend of poetic aesthetics with environmental commitment and is a rare example of a lighting design with a removable, replaceable LED light source. The floor version is a tribute to the historic Luminator by the Castiglioni brothers.

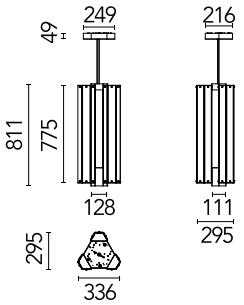

Are you a professional and your project needs consulting and support?

BOOK AN APPOINTMENT

Download

Mounting instructions PDF

Photometric Files

ULD ULD

Technical Drawings

2D ZIP

3D ZIP

Main specifications

EAN	8059607073698
Mounting	Suspension
Environments	Indoor dry location
Light source type	LED
Light sources included	Yes
LED type	Filament LED
Power (W)	90
Lumen Output (lm)	6450

Physical

Colour	Steel
Length (mm)	295
Cord length (mm)	3000
Canopy length/diameter (mm)	216
Canopy width (mm)	216
Canopy height (mm)	47
Net weight (kg)	22
Package volume (m3)	0.33
IP internal	20

©2026 Flos - P.IVA 00290820174 - 10/3/2026

In our constantly evolving world and business, technical upgrades happen every day. This means all product specifications and data are subject to change without warning in order t improve reliability, function, performance or otherwise. We make every effort to ensure the accuracy of our product images, however due to different lighting and screens used for viewing, the colours may vary. Images are indicative of the quality and style of the product but may not represent the precise details of the product you receive. This is because we are constantly working to make improvements. For aesthetic reasons, cables and/or electrical elements are often not shown. Refer to technical data sheets for all technical data. Images and colours are not part of any contract or warranty in any way.

IP 20

Photometric

Lighting type	Total
Light distribution	Asymmetric
CCT (K)	2700
CRI>	90
Extreme cut off	No

Electrical

Insulation class	I
Frequency (Hz)	50/60
Main voltage (Vac)	100-240
Power supply	Remote included
Dimmable	Yes
Power supply type	Dimmable
Dimming interface	Dimmer Integrated
Batteries inside	No

Ecodesign and Energy Labelling

This product contains a light source of energy efficiency class E

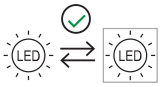

Replaceable (LED only) light source by an end-user

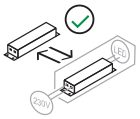

Replaceable control gear by an end-user

©2026 Flos - P.IVA 00290820174 - 10/3/2026

In our constantly evolving world and business, technical upgrades happen every day. This means all product specifications and data are subject to change without warning in order t improve reliability, function, performance or otherwise. We make every effort to ensure the accuracy of our product images, however due to different lighting and screens used for viewing, the colours may vary. Images are indicative of the quality and style of the product but may not represent the precise details of the product you receive. This is because we are constantly working to make improvements. For aesthetic reasons, cables and/or electrical elements are often not shown. Refer to technical data sheets for all technical data. Images and colours are not part of any contract or warranty in any way.

Spare Parts

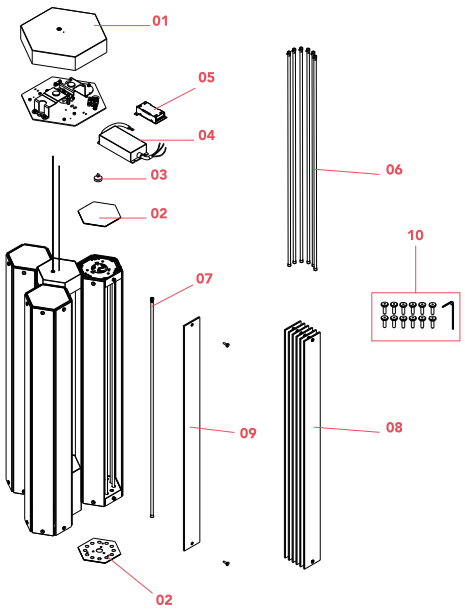

01.	SuperWire S3 Ceiling rose brill cover	RF301S164
02.	SuperWire S3 Plate assembly	RF36592
03.	Super magnet diam. 22	RF37394
04.	Skynest Power Supply 100W 100-277V	RF33061
05.	Led dimmer kit	RF34197
06.	Superwire Floor/Suspension Led L750 40MA/42VDC/27K filament kit 6 pcs	RF301F500
07.	Superwire Floor/Suspension Led L750 40MA/42VDC/27K filament	RF301F400
08.	Superwire Floor/Suspension Long glass plate and bushings kit 6 pcs	RF301F300
09.	Superwire Floor/Suspension Long glass plate and bushings	RF301F200
10.	Superwire Kit with special screws	RF301T100

©2026 Flos - P.IVA 00290820174 - 10/3/2026

In our constantly evolving world and business, technical upgrades happen every day. This means all product specifications and data are subject to change without warning in order t improve reliability, function, performance or otherwise. We make every effort to ensure the accuracy of our product images, however due to different lighting and screens used for viewing, the colours may vary. Images are indicative of the quality and style of the product but may not represent the precise details of the product you receive. This is because we are constantly working to make improvements. For aesthetic reasons, cables and/or electrical elements are often not shown. Refer to technical data sheets for all technical data. Images and colours are not part of any contract or warranty in any way.

RF301S164

SuperWire S3 Ceiling rose brill cover

RF36592

SuperWire S3 Plate assembly

RF37394

Super magnet diam. 22

RF33061

Skynest Power Supply 100W 100-277V

RF34197

Led dimmer kit

RF301F500

Superwire Floor/Suspension Led L750 40MA/42VDC/27K filament kit 6 pcs

RF301F400

Superwire Floor/Suspension Led L750 40MA/42VDC/27K filament

RF301F300

Superwire Floor/Suspension Long glass plate and bushings kit 6 pcs

©2026 Flos - P.IVA 00290820174 - 10/3/2026

In our constantly evolving world and business, technical upgrades happen every day. This means all product specifications and data are subject to change without warning in order t improve reliability, function, performance or otherwise. We make every effort to ensure the accuracy of our product images, however due to different lighting and screens used for viewing, the colours may vary. Images are indicative of the quality and style of the product but may not represent the precise details of the product you receive. This is because we are constantly working to make improvements. For aesthetic reasons, cables and/or electrical elements are often not shown. Refer to technical data sheets for all technical data. Images and colours are not part of any contract or warranty in any way.

RF301F200

Superwire Floor/Suspension Long glass plate and bushings

RF301T100

Superwire Kit with special screws

©2026 Flos - P.IVA 00290820174 - 10/3/2026

In our constantly evolving world and business, technical upgrades happen every day. This means all product specifications and data are subject to change without warning in order t improve reliability, function, performance or otherwise. We make every effort to ensure the accuracy of our product images, however due to different lighting and screens used for viewing, the colours may vary. Images are indicative of the quality and style of the product but may not represent the precise details of the product you receive. This is because we are constantly working to make improvements. For aesthetic reasons, cables and/or electrical elements are often not shown. Refer to technical data sheets for all technical data. Images and colours are not part of any contract or warranty in any way.