– INSTRUCTION MANUAL –

CPH 25

Ø120 X H74
Ø140 X H74

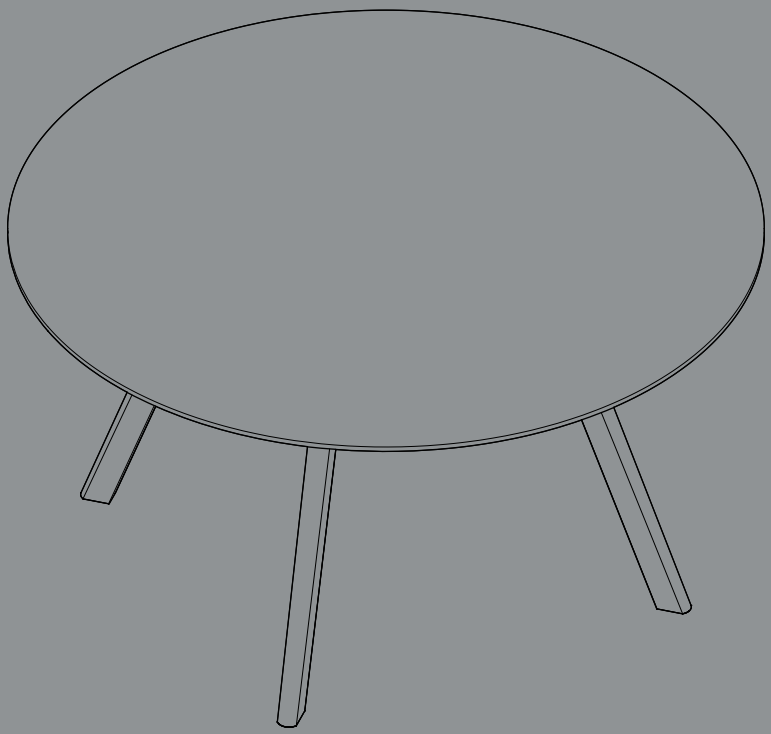

DESIGN BY BY RONAN & ERWAN BOUROULLEC

HAY

– PARTS –

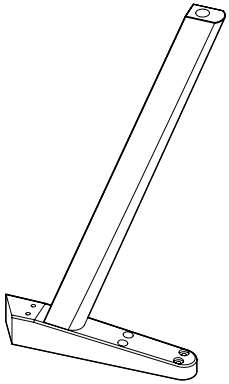

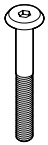

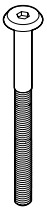

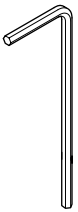

A Leg x4 B Screw x16 C Screw x20 D Allen key

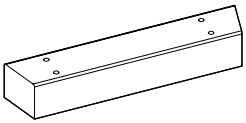

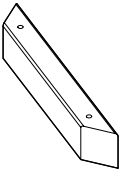

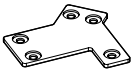

E Crossbar x2 F Crossbar x2 G Bracket x4

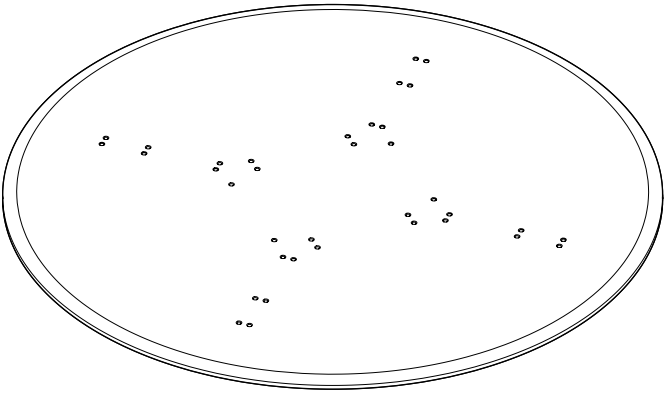

H Table top x1

Protect the table top from scratches and other damage while assembling.

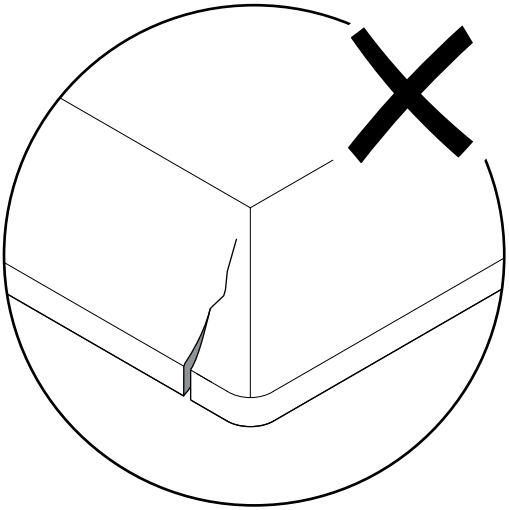

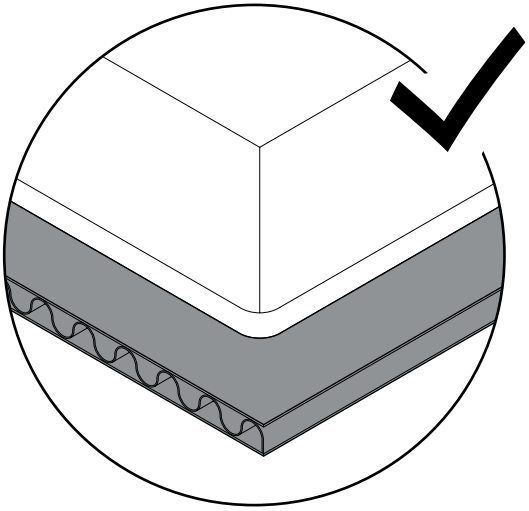

1.

Place the crossbars E followed by the brackets G on the table top H and fasten them with the screws C using the Allen key D. Insert all the screws and only tighten them loosely. Do not tighten them completely until step 5.

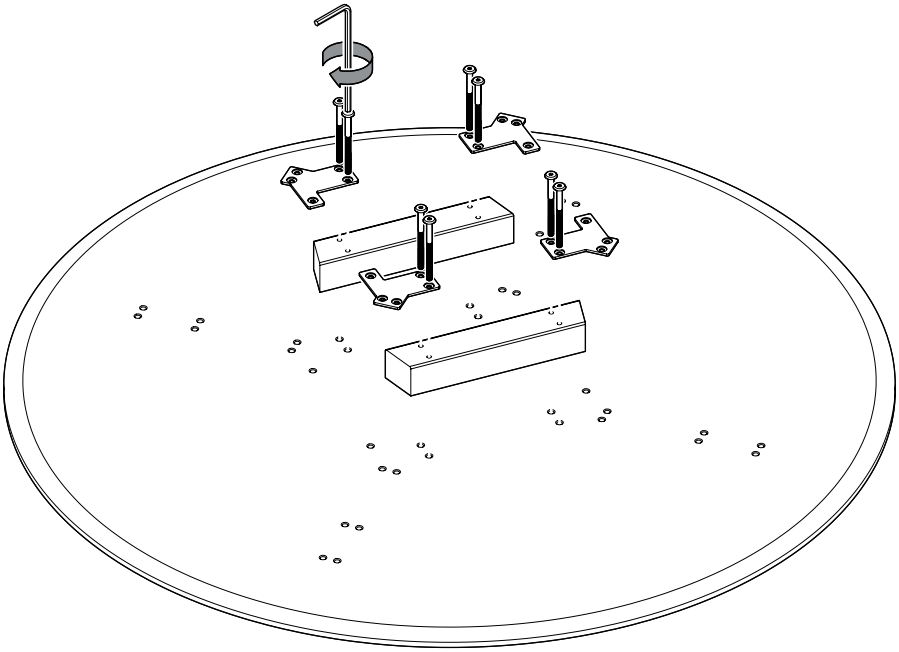

NOTICE

Be aware of the different lengths of the screws. Using the incorrect screw could damage the table.

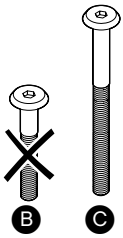

2.

Slide the crossbars F in, under the brackets G . Fasten them with the screws C using the Allen key D. Insert the screws and only tighten them loosely. Do not tighten them completely until step 5.

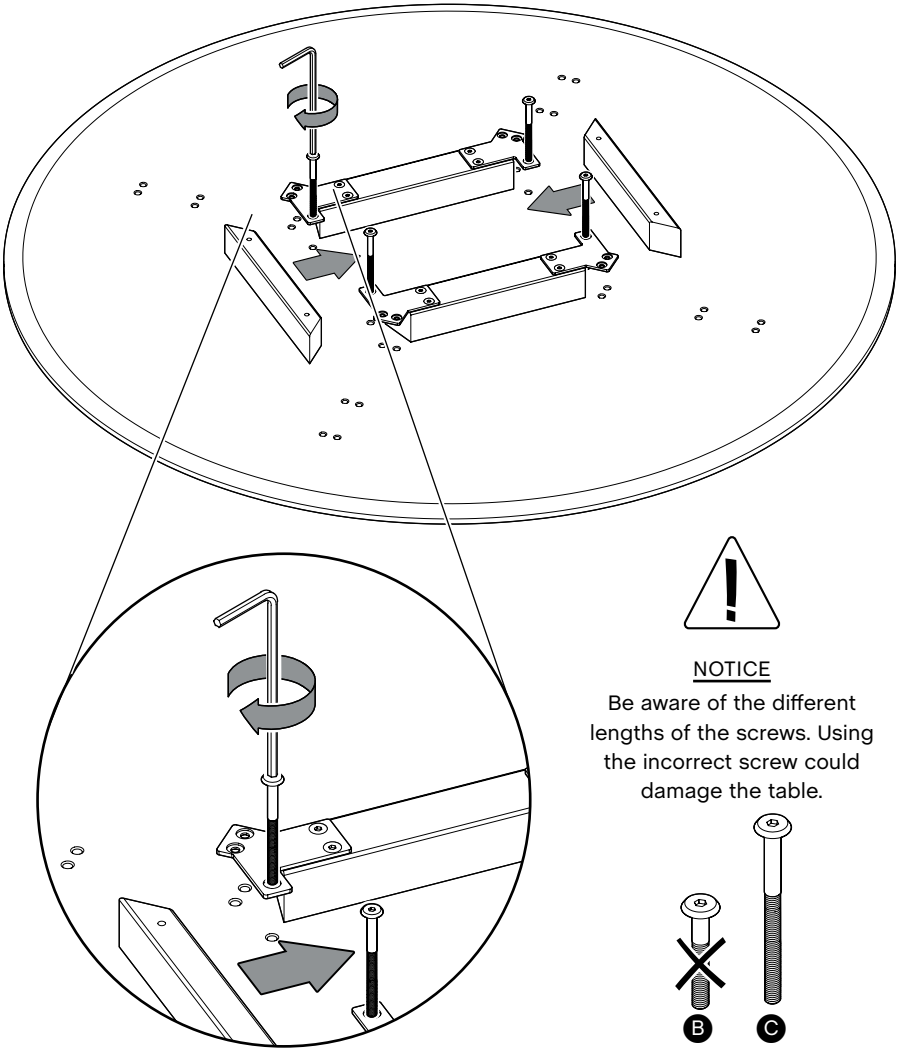

NOTICE

Be aware of the different lengths of the screws. Using the incorrect screw could damage the table.

3.

Slide the legs A in, underneath the brackets G on the table top.

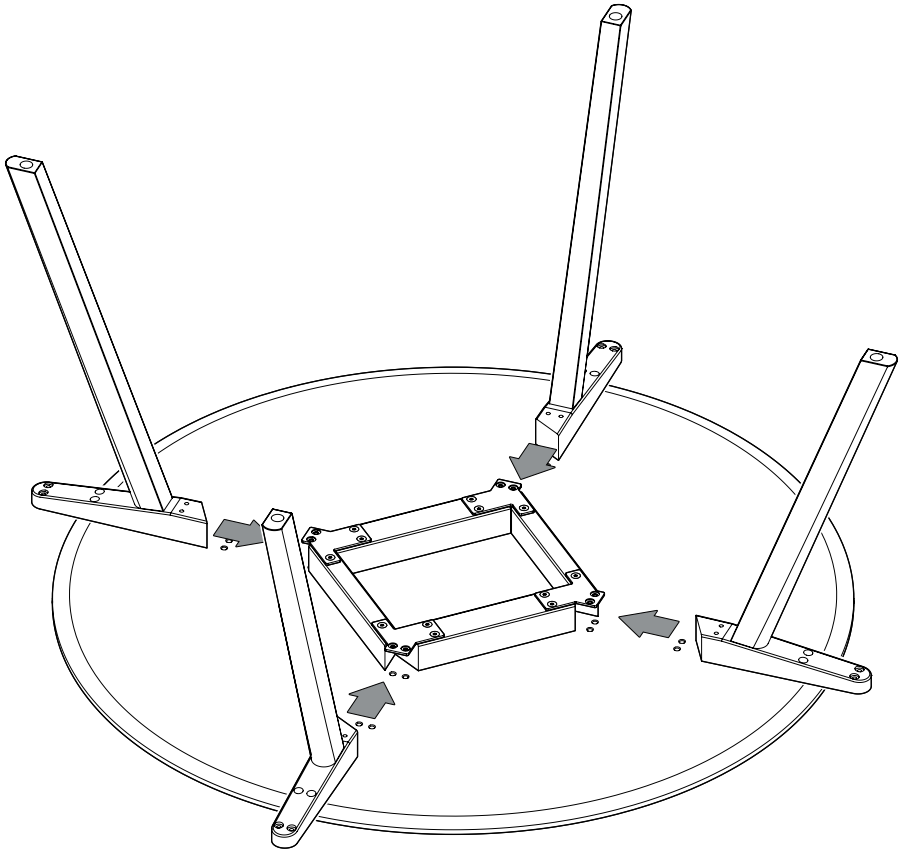

4.

Secure the legs with the screws B and C using the Allen key D. Insert all the screws and only tighten them loosely. Do not tighten them completely until step 5.

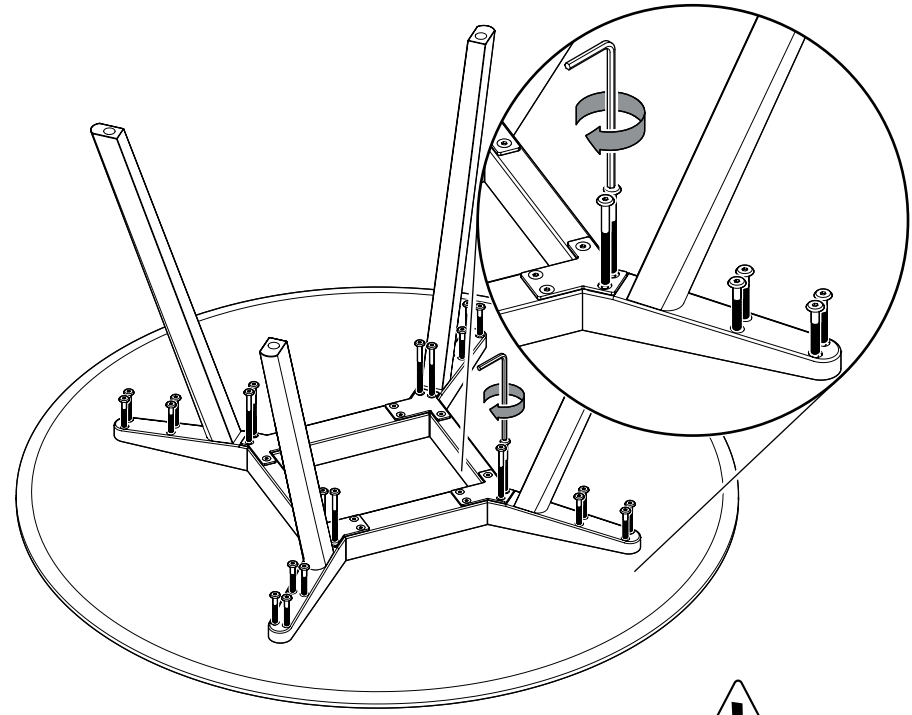

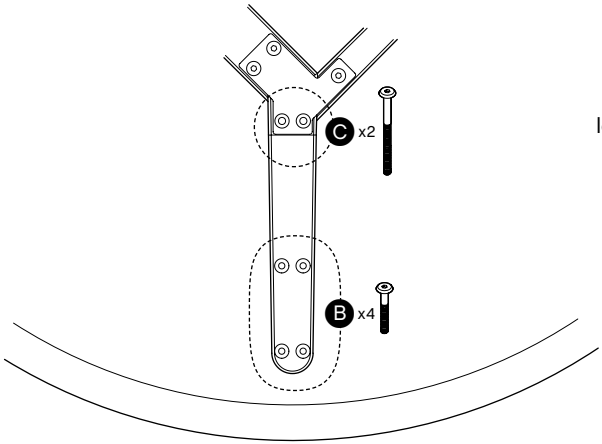

NOTICE

Be aware of the different lengths of the screws. Using the incorrect screw could damage the table.

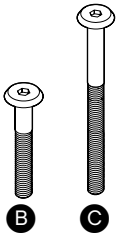

5.

Tighten all the screws completely. Then turn the table over.
(2 persons recommended).

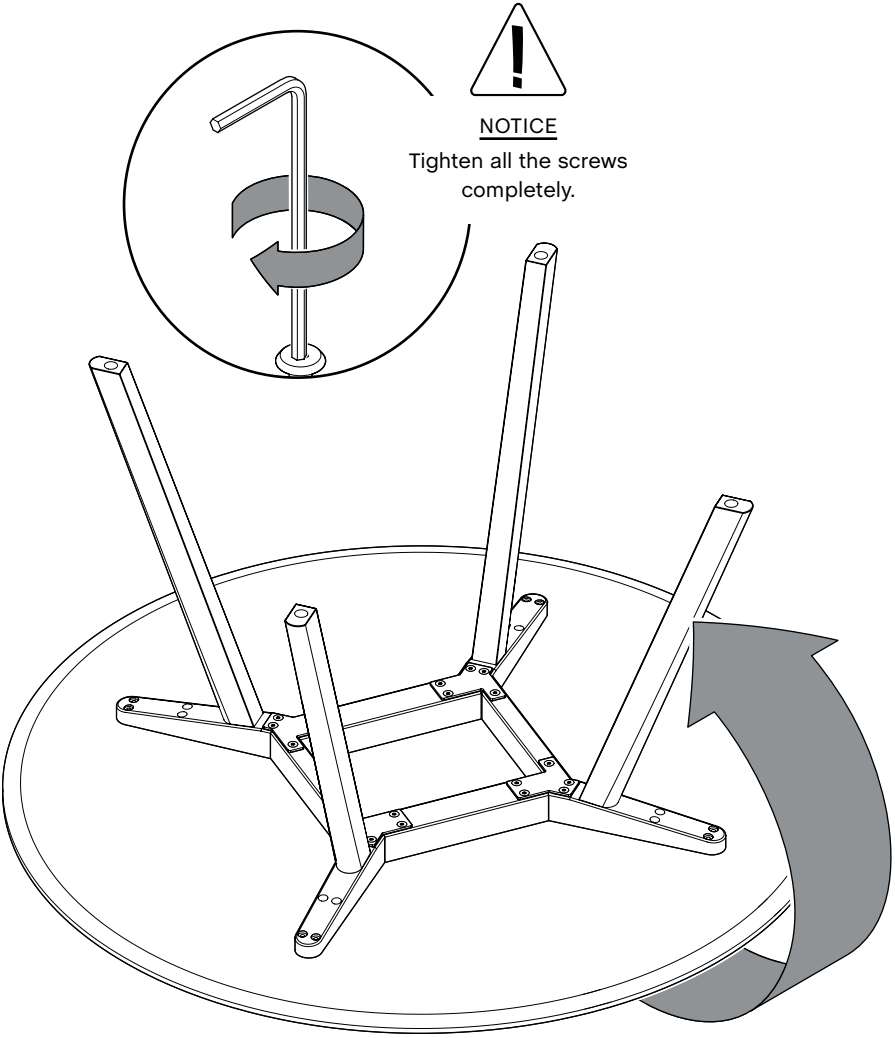

6.

If the floor is uneven and the table is wobbly, you can turn the feet to adjust them up and down to stabilise the table.

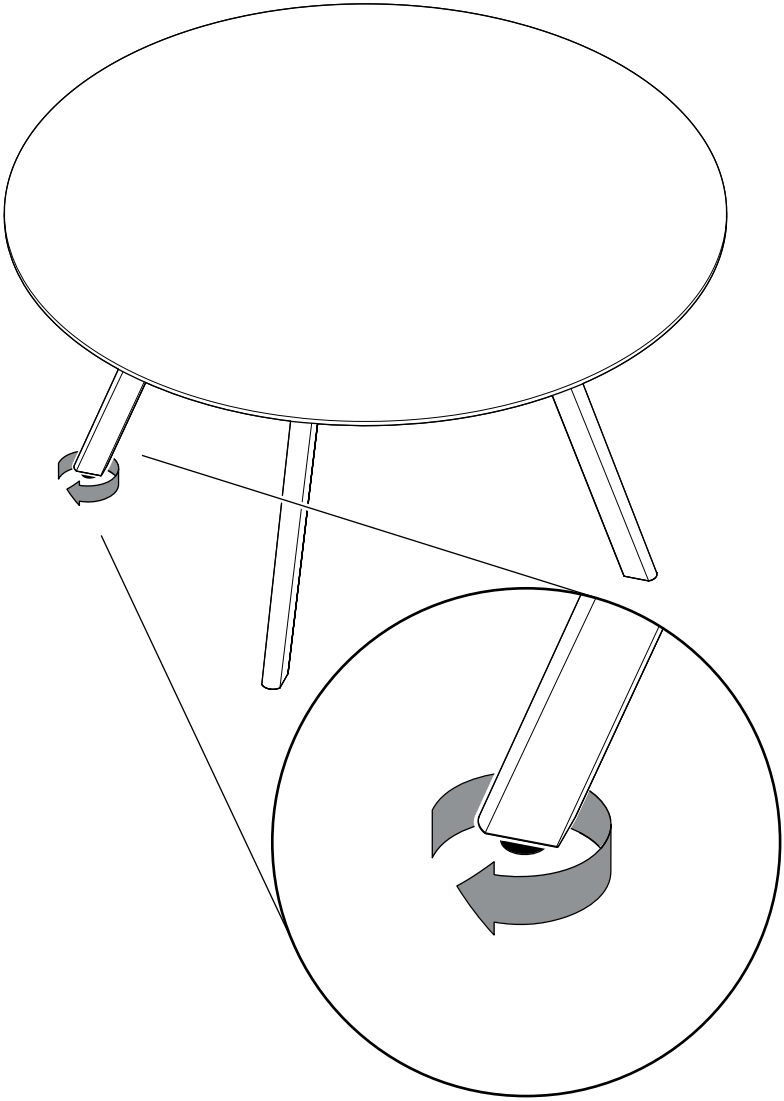

– CARE & MAINTENANCE –

Our Care & Maintenance offers guidance for optimal maintenance of your HAY product. It includes advice and instructions on cleaning and caring for specific materials to prolong the life of your furniture.

Please find our Care & Maintenance guide by scanning the QR code

You can find more relevant information on CPH 25 by scanning the QR code

You can also find the same information here hay.dk/downloads

Havnen 3 8700 Horsens Denmark
+45 3164 6000 / hay@hay.com

www.hay.com

HAY

21/05/2024